Contactors **Ex9C** up to 1450 A

- Contactors according to IEC / EN 60947-4-1
- Rated current 115 - 1450 A at 400 V AC-3
- 3-pole versions
- Coil control voltage 24 — 415 V AC/DC
- Rated conditional short circuit current I_q = 50 kA
- Suitable for industrial applications
- Mounting onto panel with screws

Ex9C contactors, designed for rated currents from 115 up to 1450 A in AC-3 category, are suitable for a wide range of industrial applications, including heavy industrial use. They are available in six frame sizes, allowing for optimized electrical performance and compact mechanical dimensions. Auxiliary contacts are available as accessories for all frame sizes.

The contactors come with a controlled coil, which ensures that power consumption is significantly reduced when the contactor is closed.

Ex9R overload relays are matched to the respective contactor for the given rated current, up to frame size Ex9C500.

Ex9	C	1450 A	-	3	230 V AC
Product family	Product	Rated current AC-3 400 V	Built-in auxiliary contacts	Poles (main contacts)	Coil control voltage
Ex9	C: Contactors	115, 150, 185, 225, 265, 300, 400, 500, 630, 800, 1000, 1260, 1450	22: 2NO+2NC -: Without auxiliary contact	3	24 - 415 V AC/DC

Certification marks

CE

Contactors **Ex9C** up to 1450 A

Frame sizes

Frame size 185
Rated currents
115, 150, 185 A

Frame size 300
Rated currents
225, 265, 300 A

Frame size 500
Rated currents
400, 500 A

Contactors **Ex9C** up to 1450 A

Frame sizes

Frame size 1000
Rated currents
630, 800, 1000 A

Frame size 1260
Rated currents
1260 A

Frame size 1450
Rated currents
1450 A

Contactors **Ex9C** up to 1450 A

Accessories up to 1260 A

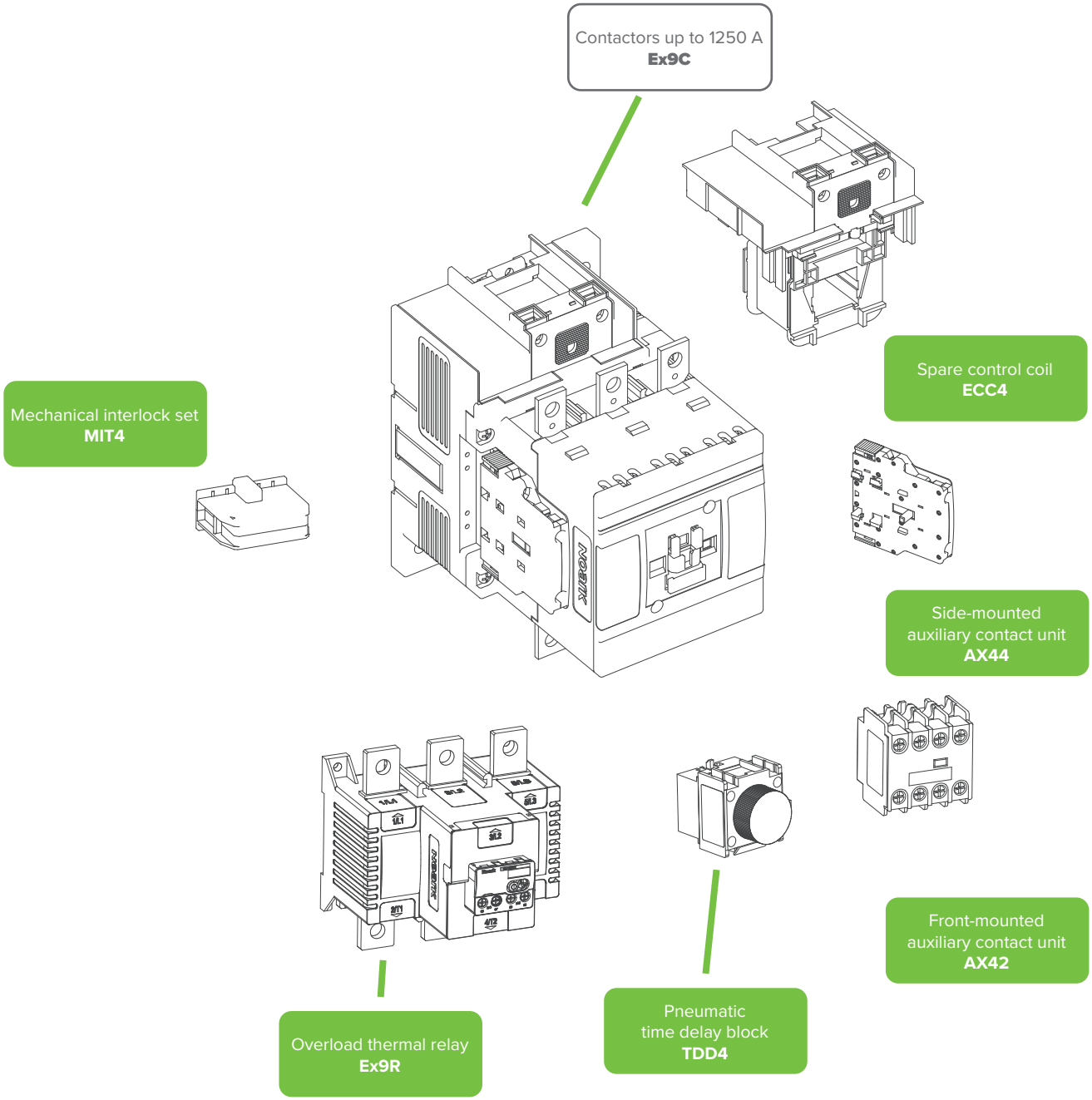

Front-mounted auxiliary contacts AX42

Side-mounted auxiliary contacts AX44 (Compatible with Ex9C up to 1260 A)

Overload thermal relays Ex9R (Only up to frame Ex9C500)

Pneumatic time delay block TDD4

Mechanical interlock MIT4 (Only up to frame Ex9C500)

Spare control coil ECC4 (Only up to frame Ex9C500)

Accessories up to 1450 A

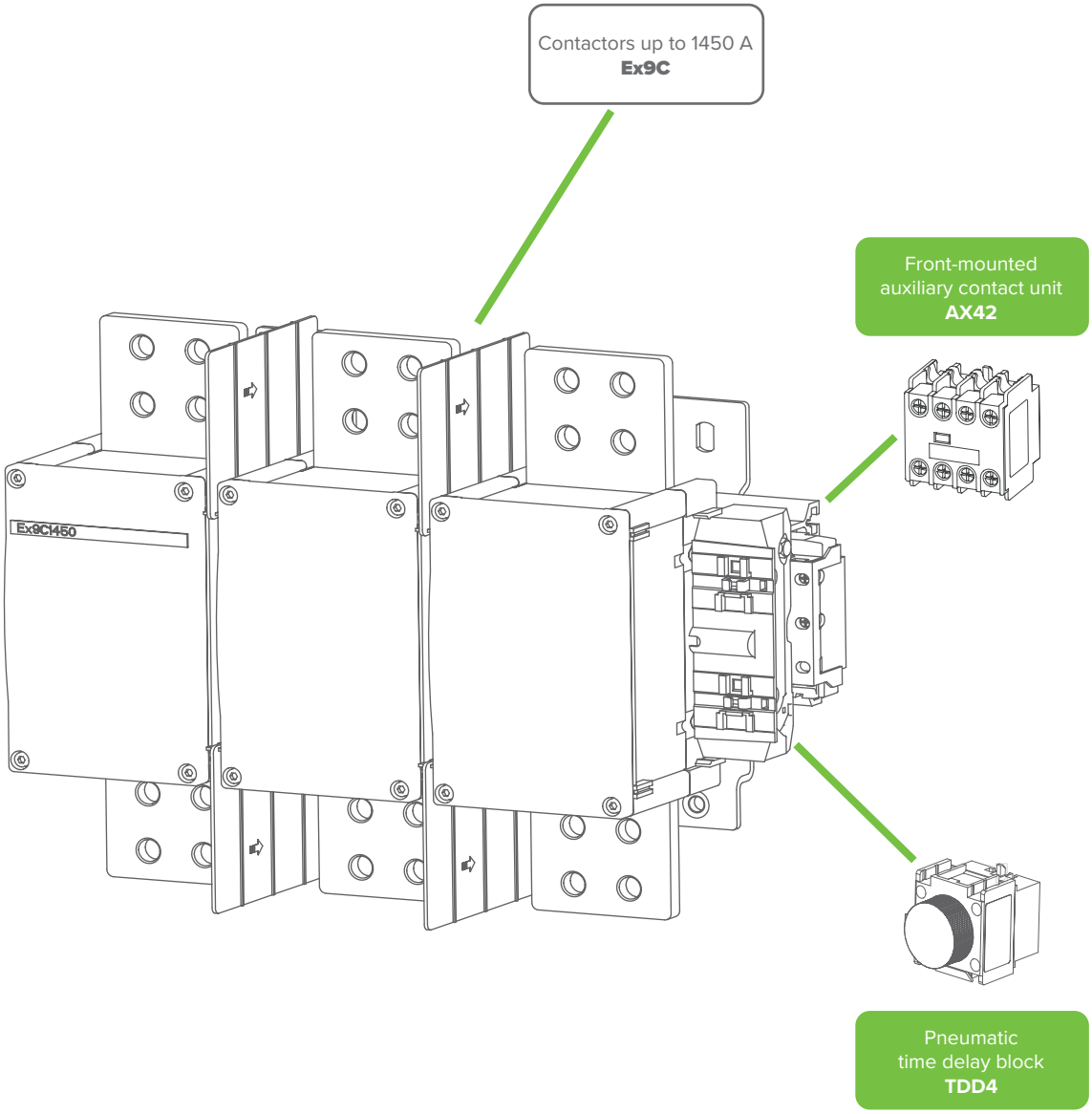

Front-mounted auxiliary contacts AX42

Pneumatic time delay block TDD4

Contactors **Ex9C**, frame size 185

Rated current 115 A, 3-pole

- Mounting onto panel with screws
- Front-mounted auxiliary contacts AX42.. as well as side-mounted ones AX44.. can be used
- AC and DC control voltage
- Minimized power consumption of coil
- Can be combined with overload relays Ex9R185

Control voltage	I_e	Frame size	Poles	Auxiliary contacts	Article No.	Type	Packing
415 V AC/DC	115 A	185	3	2NO+2NC	106213	Ex9C115 22 3P 415V AC/DC	1/2
400 V AC/DC	115 A	185	3	2NO+2NC	106214	Ex9C115 22 3P 400V AC/DC	1/2
380 V AC/DC	115 A	185	3	2NO+2NC	106215	Ex9C115 22 3P 380V AC/DC	1/2
240 V AC/DC	115 A	185	3	2NO+2NC	106218	Ex9C115 22 3P 240V AC/DC	1/2
230 V AC/DC	115 A	185	3	2NO+2NC	106219	Ex9C115 22 3P 230V AC/DC	1/2
220 V AC/DC	115 A	185	3	2NO+2NC	106220	Ex9C115 22 3P 220V AC/DC	1/2
127 V AC/DC	115 A	185	3	2NO+2NC	106221	Ex9C115 22 3P 127V AC/DC	1/2
110 V AC/DC	115 A	185	3	2NO+2NC	106222	Ex9C115 22 3P 110V AC/DC	1/2
48 V AC/DC	115 A	185	3	2NO+2NC	106211	Ex9C115 22 3P 48V AC/DC	1/2
42 V AC/DC	115 A	185	3	2NO+2NC	106212	Ex9C115 22 3P 42V AC/DC	1/2
36 V AC/DC	115 A	185	3	2NO+2NC	106216	Ex9C115 22 3P 36V AC/DC	1/2
24 V AC/DC	115 A	185	3	2NO+2NC	106217	Ex9C115 22 3P 24V AC/DC	1/2

Rated current 150 A, 3-pole

- Mounting onto panel with screws
- Front-mounted auxiliary contacts AX42.. as well as side-mounted ones AX44.. can be used
- AC and DC control voltage
- Minimized power consumption of coil
- Can be combined with overload relays Ex9R185

Control voltage	I_e	Frame size	Poles	Auxiliary contacts	Article No.	Type	Packing
415 V AC/DC	150 A	185	3	2NO+2NC	106225	Ex9C150 22 3P 415V AC/DC	1/2
400 V AC/DC	150 A	185	3	2NO+2NC	106226	Ex9C150 22 3P 400V AC/DC	1/2
380 V AC/DC	150 A	185	3	2NO+2NC	106227	Ex9C150 22 3P 380V AC/DC	1/2
240 V AC/DC	150 A	185	3	2NO+2NC	106230	Ex9C150 22 3P 240V AC/DC	1/2
230 V AC/DC	150 A	185	3	2NO+2NC	106231	Ex9C150 22 3P 230V AC/DC	1/2
220 V AC/DC	150 A	185	3	2NO+2NC	106232	Ex9C150 22 3P 220V AC/DC	1/2
127 V AC/DC	150 A	185	3	2NO+2NC	106233	Ex9C150 22 3P 127V AC/DC	1/2
110 V AC/DC	150 A	185	3	2NO+2NC	106234	Ex9C150 22 3P 110V AC/DC	1/2
48 V AC/DC	150 A	185	3	2NO+2NC	106223	Ex9C150 22 3P 48V AC/DC	1/2
42 V AC/DC	150 A	185	3	2NO+2NC	106224	Ex9C150 22 3P 42V AC/DC	1/2
36 V AC/DC	150 A	185	3	2NO+2NC	106228	Ex9C150 22 3P 36V AC/DC	1/2
24 V AC/DC	150 A	185	3	2NO+2NC	106229	Ex9C150 22 3P 24V AC/DC	1/2

Wiring diagram

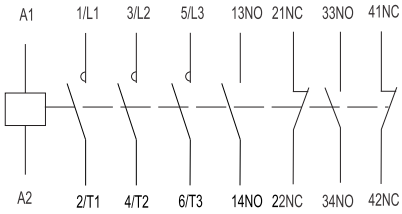

Contactors **Ex9C**, frame size 185

Rated current 185 A, 3-pole

- Mounting onto panel with screws
- Front-mounted auxiliary contacts AX42.. as well as side-mounted ones AX44.. can be used
- AC and DC control voltage
- Minimized power consumption of coil
- Can be combined with overload relays Ex9R185

Control voltage	I_e	Frame size	Poles	Auxiliary contacts	Article No.	Type	Packing
415 V AC/DC	185 A	185	3	2NO+2NC	106237	Ex9C185 22 3P 415V AC/DC	1/2
400 V AC/DC	185 A	185	3	2NO+2NC	106238	Ex9C185 22 3P 400V AC/DC	1/2
380 V AC/DC	185 A	185	3	2NO+2NC	106239	Ex9C185 22 3P 380V AC/DC	1/2
240 V AC/DC	185 A	185	3	2NO+2NC	106242	Ex9C185 22 3P 240V AC/DC	1/2
230 V AC/DC	185 A	185	3	2NO+2NC	106243	Ex9C185 22 3P 230V AC/DC	1/2
220 V AC/DC	185 A	185	3	2NO+2NC	106244	Ex9C185 22 3P 220V AC/DC	1/2
127 V AC/DC	185 A	185	3	2NO+2NC	106245	Ex9C185 22 3P 127V AC/DC	1/2
110 V AC/DC	185 A	185	3	2NO+2NC	106246	Ex9C185 22 3P 110V AC/DC	1/2
48 V AC/DC	185 A	185	3	2NO+2NC	106235	Ex9C185 22 3P 48V AC/DC	1/2
42 V AC/DC	185 A	185	3	2NO+2NC	106236	Ex9C185 22 3P 42V AC/DC	1/2
36 V AC/DC	185 A	185	3	2NO+2NC	106240	Ex9C185 22 3P 36V AC/DC	1/2
24 V AC/DC	185 A	185	3	2NO+2NC	106241	Ex9C185 22 3P 24V AC/DC	1/2

Wiring diagram

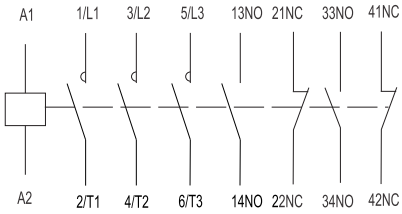

Contactors **Ex9C**, frame size 300

Rated current 225 A, 3-pole

- Mounting onto panel with screws
- Front-mounted auxiliary contacts AX42.. as well as side-mounted ones AX44.. can be used
- AC and DC control voltage
- Minimized power consumption of coil
- Can be combined with overload relays Ex9R500

Control voltage	I_e	Frame size	Poles	Auxiliary contacts	Article No.	Type	Packing
415 V AC/DC	225 A	300	3	2NO+2NC	106249	Ex9C225 22 3P 415V AC/DC	1/2
400 V AC/DC	225 A	300	3	2NO+2NC	106250	Ex9C225 22 3P 400V AC/DC	1/2
380 V AC/DC	225 A	300	3	2NO+2NC	106251	Ex9C225 22 3P 380V AC/DC	1/2
240 V AC/DC	225 A	300	3	2NO+2NC	106254	Ex9C225 22 3P 240V AC/DC	1/2
230 V AC/DC	225 A	300	3	2NO+2NC	106255	Ex9C225 22 3P 230V AC/DC	1/2
220 V AC/DC	225 A	300	3	2NO+2NC	106256	Ex9C225 22 3P 220V AC/DC	1/2
127 V AC/DC	225 A	300	3	2NO+2NC	106257	Ex9C225 22 3P 127V AC/DC	1/2
110 V AC/DC	225 A	300	3	2NO+2NC	106258	Ex9C225 22 3P 110V AC/DC	1/2
48 V AC/DC	225 A	300	3	2NO+2NC	106247	Ex9C225 22 3P 48V AC/DC	1/2
42 V AC/DC	225 A	300	3	2NO+2NC	106248	Ex9C225 22 3P 42V AC/DC	1/2
36 V AC/DC	225 A	300	3	2NO+2NC	106252	Ex9C225 22 3P 36V AC/DC	1/2
24 V AC/DC	225 A	300	3	2NO+2NC	106253	Ex9C225 22 3P 24V AC/DC	1/2

Rated current 265 A, 3-pole

- Mounting onto panel with screws
- Front-mounted auxiliary contacts AX42.. as well as side-mounted ones AX44.. can be used
- AC and DC control voltage
- Minimized power consumption of coil
- Can be combined with overload relays Ex9R500

Control voltage	I_e	Frame size	Poles	Auxiliary contacts	Article No.	Type	Packing
415 V AC/DC	265 A	300	3	2NO+2NC	106261	Ex9C265 22 3P 415V AC/DC	1/2
400 V AC/DC	265 A	300	3	2NO+2NC	106262	Ex9C265 22 3P 400V AC/DC	1/2
380 V AC/DC	265 A	300	3	2NO+2NC	106263	Ex9C265 22 3P 380V AC/DC	1/2
240 V AC/DC	265 A	300	3	2NO+2NC	106266	Ex9C265 22 3P 240V AC/DC	1/2
230 V AC/DC	265 A	300	3	2NO+2NC	106267	Ex9C265 22 3P 230V AC/DC	1/2
220 V AC/DC	265 A	300	3	2NO+2NC	106268	Ex9C265 22 3P 220V AC/DC	1/2
127 V AC/DC	265 A	300	3	2NO+2NC	106269	Ex9C265 22 3P 127V AC/DC	1/2
110 V AC/DC	265 A	300	3	2NO+2NC	106270	Ex9C265 22 3P 110V AC/DC	1/2
48 V AC/DC	265 A	300	3	2NO+2NC	106259	Ex9C265 22 3P 48V AC/DC	1/2
42 V AC/DC	265 A	300	3	2NO+2NC	106260	Ex9C265 22 3P 42V AC/DC	1/2
36 V AC/DC	265 A	300	3	2NO+2NC	106264	Ex9C265 22 3P 36V AC/DC	1/2
24 V AC/DC	265 A	300	3	2NO+2NC	106265	Ex9C265 22 3P 24V AC/DC	1/2

Wiring diagram

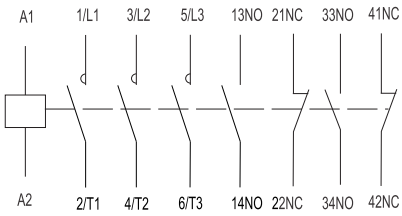

Contactors **Ex9C**, frame size 300

Rated current 300 A, 3-pole

- Mounting onto panel with screws
- Front-mounted auxiliary contacts AX42.. as well as side-mounted ones AX44.. can be used
- AC and DC control voltage
- Minimized power consumption of coil
- Can be combined with overload relays Ex9R500

Control voltage	I_e	Frame size	Poles	Auxiliary contacts	Article No.	Type	Packing
415 V AC/DC	300 A	300	3	2NO+2NC	106273	Ex9C300 22 3P 415V AC/DC	1/2
400 V AC/DC	300 A	300	3	2NO+2NC	106274	Ex9C300 22 3P 400V AC/DC	1/2
380 V AC/DC	300 A	300	3	2NO+2NC	106275	Ex9C300 22 3P 380V AC/DC	1/2
240 V AC/DC	300 A	300	3	2NO+2NC	106278	Ex9C300 22 3P 240V AC/DC	1/2
230 V AC/DC	300 A	300	3	2NO+2NC	106279	Ex9C300 22 3P 230V AC/DC	1/2
220 V AC/DC	300 A	300	3	2NO+2NC	106280	Ex9C300 22 3P 220V AC/DC	1/2
127 V AC/DC	300 A	300	3	2NO+2NC	106281	Ex9C300 22 3P 127V AC/DC	1/2
110 V AC/DC	300 A	300	3	2NO+2NC	106282	Ex9C300 22 3P 110V AC/DC	1/2
48 V AC/DC	300 A	300	3	2NO+2NC	106271	Ex9C300 22 3P 48V AC/DC	1/2
42 V AC/DC	300 A	300	3	2NO+2NC	106272	Ex9C300 22 3P 42V AC/DC	1/2
36 V AC/DC	300 A	300	3	2NO+2NC	106276	Ex9C300 22 3P 36V AC/DC	1/2
24 V AC/DC	300 A	300	3	2NO+2NC	106277	Ex9C300 22 3P 24V AC/DC	1/2

Wiring diagram

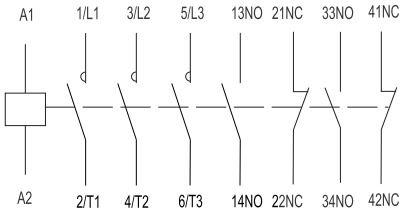

Contactors **Ex9C**, frame size 500

Rated current 400 A, 3-pole

- Mounting onto panel with screws
- Front-mounted auxiliary contacts AX42.. as well as side-mounted ones AX44.. can be used
- AC and DC control voltage
- Minimized power consumption of coil
- Can be combined with overload relays Ex9R500

Control voltage	I_e	Frame size	Poles	Auxiliary contacts	Article No.	Type	Packing
415 V AC/DC	400 A	500	3	2NO+2NC	106285	Ex9C400 22 3P 415V AC/DC	1/1
400 V AC/DC	400 A	500	3	2NO+2NC	106286	Ex9C400 22 3P 400V AC/DC	1/1
380 V AC/DC	400 A	500	3	2NO+2NC	106287	Ex9C400 22 3P 380V AC/DC	1/1
240 V AC/DC	400 A	500	3	2NO+2NC	106290	Ex9C400 22 3P 240V AC/DC	1/1
230 V AC/DC	400 A	500	3	2NO+2NC	106291	Ex9C400 22 3P 230V AC/DC	1/1
220 V AC/DC	400 A	500	3	2NO+2NC	106292	Ex9C400 22 3P 220V AC/DC	1/1
127 V AC/DC	400 A	500	3	2NO+2NC	106293	Ex9C400 22 3P 127V AC/DC	1/1
110 V AC/DC	400 A	500	3	2NO+2NC	106294	Ex9C400 22 3P 110V AC/DC	1/1
48 V AC/DC	400 A	500	3	2NO+2NC	106283	Ex9C400 22 3P 48V AC/DC	1/1
42 V AC/DC	400 A	500	3	2NO+2NC	106284	Ex9C400 22 3P 42V AC/DC	1/1
36 V AC/DC	400 A	500	3	2NO+2NC	106288	Ex9C400 22 3P 36V AC/DC	1/1
24 V AC/DC	400 A	500	3	2NO+2NC	106289	Ex9C400 22 3P 24V AC/DC	1/1

Rated current 500 A, 3-pole

- Mounting onto panel with screws
- Front-mounted auxiliary contacts AX42.. as well as side-mounted ones AX44.. can be used
- AC and DC control voltage
- Minimized power consumption of coil
- Can be combined with overload relays Ex9R500

Control voltage	I_e	Frame size	Poles	Auxiliary contacts	Article No.	Type	Packing
415 V AC/DC	500 A	500	3	2NO+2NC	106297	Ex9C500 22 3P 415V AC/DC	1/1
400 V AC/DC	500 A	500	3	2NO+2NC	106298	Ex9C500 22 3P 400V AC/DC	1/1
380 V AC/DC	500 A	500	3	2NO+2NC	106299	Ex9C500 22 3P 380V AC/DC	1/1
240 V AC/DC	500 A	500	3	2NO+2NC	106302	Ex9C500 22 3P 240V AC/DC	1/1
230 V AC/DC	500 A	500	3	2NO+2NC	106303	Ex9C500 22 3P 230V AC/DC	1/1
220 V AC/DC	500 A	500	3	2NO+2NC	106304	Ex9C500 22 3P 220V AC/DC	1/1
127 V AC/DC	500 A	500	3	2NO+2NC	106305	Ex9C500 22 3P 127V AC/DC	1/1
110 V AC/DC	500 A	500	3	2NO+2NC	106306	Ex9C500 22 3P 110V AC/DC	1/1
48 V AC/DC	500 A	500	3	2NO+2NC	106295	Ex9C500 22 3P 48V AC/DC	1/1
42 V AC/DC	500 A	500	3	2NO+2NC	106296	Ex9C500 22 3P 42V AC/DC	1/1
36 V AC/DC	500 A	500	3	2NO+2NC	106300	Ex9C500 22 3P 36V AC/DC	1/1
24 V AC/DC	500 A	500	3	2NO+2NC	106301	Ex9C500 22 3P 24V AC/DC	1/1

Wiring diagram

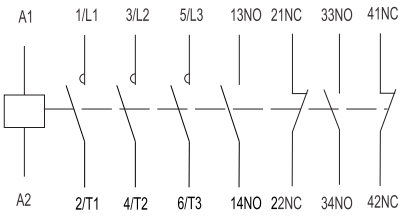

Contactors **Ex9C**, frame size 1000

Rated current 630 A, 3-pole

- Mounting onto panel with screws
- Front-mounted auxiliary contacts AX42.. as well as side-mounted ones AX44.. can be used
- AC and DC control voltage
- Minimized power consumption of coil

Control voltage	I_e	Frame size	Poles	Auxiliary contacts	Article No.	Type	Packing
415 V AC/DC	630 A	1000	3	2NO+2NC	116852	Ex9C630 22 3P 415V AC/DC	1/1
400 V AC/DC	630 A	1000	3	2NO+2NC	116853	Ex9C630 22 3P 400V AC/DC	1/1
380 V AC/DC	630 A	1000	3	2NO+2NC	116854	Ex9C630 22 3P 380V AC/DC	1/1
240 V AC/DC	630 A	1000	3	2NO+2NC	116855	Ex9C630 22 3P 240V AC/DC	1/1
230 V AC/DC	630 A	1000	3	2NO+2NC	116856	Ex9C630 22 3P 230V AC/DC	1/1
220 V AC/DC	630 A	1000	3	2NO+2NC	116857	Ex9C630 22 3P 220V AC/DC	1/1
127 V AC/DC	630 A	1000	3	2NO+2NC	116858	Ex9C630 22 3P 127V AC/DC	1/1
110 V AC/DC	630 A	1000	3	2NO+2NC	116859	Ex9C630 22 3P 110V AC/DC	1/1
48 V AC/DC	630 A	1000	3	2NO+2NC	116860	Ex9C630 22 3P 48V AC/DC	1/1

Rated current 800 A, 3-pole

- Mounting onto panel with screws
- Front-mounted auxiliary contacts AX42.. as well as side-mounted ones AX44.. can be used
- AC and DC control voltage
- Minimized power consumption of coil

Control voltage	I_e	Frame size	Poles	Auxiliary contacts	Article No.	Type	Packing
415 V AC/DC	800 A	1000	3	2NO+2NC	116861	Ex9C800 22 3P 415V AC/DC	1/1
400 V AC/DC	800 A	1000	3	2NO+2NC	116862	Ex9C800 22 3P 400V AC/DC	1/1
380 V AC/DC	800 A	1000	3	2NO+2NC	116863	Ex9C800 22 3P 380V AC/DC	1/1
240 V AC/DC	800 A	1000	3	2NO+2NC	116864	Ex9C800 22 3P 240V AC/DC	1/1
230 V AC/DC	800 A	1000	3	2NO+2NC	116865	Ex9C800 22 3P 230V AC/DC	1/1
220 V AC/DC	800 A	1000	3	2NO+2NC	116866	Ex9C800 22 3P 220V AC/DC	1/1
127 V AC/DC	800 A	1000	3	2NO+2NC	116867	Ex9C800 22 3P 127V AC/DC	1/1
110 V AC/DC	800 A	1000	3	2NO+2NC	116868	Ex9C800 22 3P 110V AC/DC	1/1
48 V AC/DC	800 A	1000	3	2NO+2NC	116869	Ex9C800 22 3P 48V AC/DC	1/1

Wiring diagram

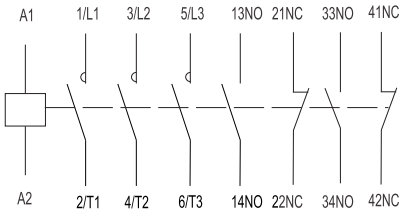

Contactors **Ex9C**, frame size 1000

Rated current 1000 A, 3-pole

- Mounting onto panel with screws
- Front-mounted auxiliary contacts AX42.. as well as side-mounted ones AX44.. can be used
- AC and DC control voltage
- Minimized power consumption of coil

Control voltage	I_e	Frame size	Poles	Auxiliary contacts	Article No.	Type	Packing
415 V AC/DC	1000 A	1000	3	2NO+2NC	116870	Ex9C1000 22 3P 415V AC/DC	1/1
400 V AC/DC	1000 A	1000	3	2NO+2NC	116871	Ex9C1000 22 3P 400V AC/DC	1/1
380 V AC/DC	1000 A	1000	3	2NO+2NC	116872	Ex9C1000 22 3P 380V AC/DC	1/1
240 V AC/DC	1000 A	1000	3	2NO+2NC	116873	Ex9C1000 22 3P 240V AC/DC	1/1
230 V AC/DC	1000 A	1000	3	2NO+2NC	116874	Ex9C1000 22 3P 230V AC/DC	1/1
220 V AC/DC	1000 A	1000	3	2NO+2NC	116875	Ex9C1000 22 3P 220V AC/DC	1/1
127 V AC/DC	1000 A	1000	3	2NO+2NC	116876	Ex9C1000 22 3P 127V AC/DC	1/1
110 V AC/DC	1000 A	1000	3	2NO+2NC	116877	Ex9C1000 22 3P 110V AC/DC	1/1
48 V AC/DC	1000 A	1000	3	2NO+2NC	116878	Ex9C1000 22 3P 48V AC/DC	1/1

Wiring diagram

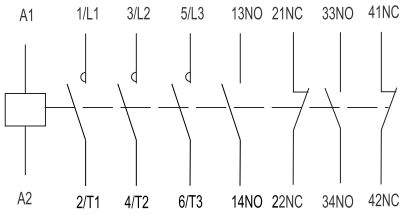

Contactors **Ex9C**, frame size 1260

Rated current 1260 A, 3-pole

- Mounting onto panel with screws
- Front-mounted auxiliary contacts AX42.. as well as side-mounted ones AX44.. can be used
- AC and DC control voltage
- Minimized power consumption of coil

Control voltage	I_e	Frame size	Poles	Auxiliary contacts	Article No.	Type	Packing
415 V AC/DC	1260 A	1260	3	2NO+2NC	116879	Ex9C1260 22 3P 415V AC/DC	1/1
400 V AC/DC	1260 A	1260	3	2NO+2NC	116880	Ex9C1260 22 3P 400V AC/DC	1/1
380 V AC/DC	1260 A	1260	3	2NO+2NC	116881	Ex9C1260 22 3P 380V AC/DC	1/1
240 V AC/DC	1260 A	1260	3	2NO+2NC	116882	Ex9C1260 22 3P 240V AC/DC	1/1
230 V AC/DC	1260 A	1260	3	2NO+2NC	116883	Ex9C1260 22 3P 230V AC/DC	1/1
220 V AC/DC	1260 A	1260	3	2NO+2NC	116884	Ex9C1260 22 3P 220V AC/DC	1/1
127 V AC/DC	1260 A	1260	3	2NO+2NC	116885	Ex9C1260 22 3P 127V AC/DC	1/1
110 V AC/DC	1260 A	1260	3	2NO+2NC	116886	Ex9C1260 22 3P 110V AC/DC	1/1
48 V AC/DC	1260 A	1260	3	2NO+2NC	116887	Ex9C1260 22 3P 48V AC/DC	1/1

Wiring diagram

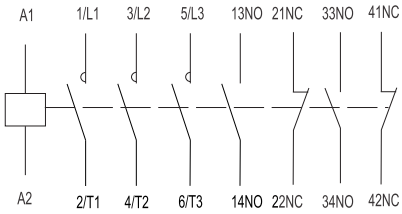

Contactors **Ex9C**, frame size 1450

Rated current 1450 A, 3-pole

- Mounting onto panel with screws
- Front-mounted auxiliary contacts AX42
- AC control voltage
- Minimized power consumption of coil

Control voltage	I_e	Frame size	Poles	Auxiliary contacts	Article No.	Type	Packing
380 V AC	1450 A	1450	3	-	116888	Ex9C1450 3P 380V AC	1/1
220 V AC	1450 A	1450	3	-	116889	Ex9C1450 3P 220V AC	1/1

Wiring diagram

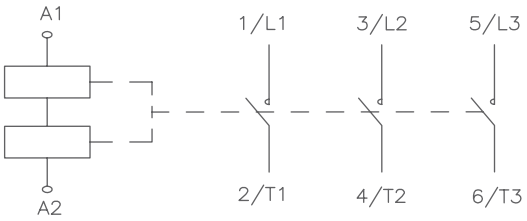

Technical Data **Ex9C**, frame size 185

Contactors Ex9C115, Ex9C150, Ex9C185

General parameters		
Contactors rated at AC-3		
Suitable for industrial applications		
3-pole versions		
Mounting with screws onto panel		
With built-in 2NO + 2NC auxiliary contacts		
Accessories		
Front-mounted auxiliary contacts	AX42	101284 — 101291
Side-mounted auxiliary contacts	AX44	106322, 107958, 107957
Overload thermal relay	Ex9R185	106326 — 106328
Pneumatic time delay block	TDD4	104489 — 104494
Mechanical interlocks	MIT44	107962

Electrical parameters - main contacts and general			
	Ex9C115	**Ex9C150**	**Ex9C185**
Tested according to	IEC/EN 60947-4-1		
Rated operating voltage U_e	230 / 400 / 690 / 1000 V AC		
Rated insulating voltage U_i	1000 V AC		
Rated impulse withstand voltage U_{imp}	8 kV		
Rated frequency for AC	50/60 Hz		
Interlocked opposing contacts according to EN 60947-4-1, Annex L	yes	yes	yes
Conventional free air thermal current I_{th}	160 A	185 A	215 A
Rated operational current I_e			
AC-1	160 A	185 A	215 A
AC-3 / AC-4 at 400 V	115 A / 54 A	150 A / 68 A	185 A / 81 A
AC-3 / AC-4 at 690 V	115 A / 48 A	150 A / 57 A	170 A / 65 A
AC-3 / AC-4 at 1000 V	53 A / 34 A	65 A / 38 A	65 A / 42 A
Rated power of 3-phase motor			
AC-3 / AC-4 at 230 V	37 kW / 18.5 kW	45 kW / 22 kW	55 kW / 30 kW
AC-3 / AC-4 at 400 V	55 kW / 30 kW	75 kW / 37 kW	90 kW / 45 kW
AC-3 / AC-4 at 690 V	110 kW / 50 kW	132 kW / 55 kW	160 kW / 63 kW
Maximum short circuit protection fuse			
Coordination type 1 at 500 V AC	355 A gG/gL	355 A gG/gL	355 A gG/gL
Coordination type 2 at 500 V AC	315 A gG/gL	315 A gG/gL	315 A gG/gL
Safe isolation (EN 61140)			
Main contact — main contact	600 V AC	600 V AC	600 V AC
Main contact — coil	600 V AC	600 V AC	600 V AC
3-phase power AC-1			
Maximum back-up fuse gG/gL	400 A	400 A	400 A
Rated current $I_e = I_{th}$	160 A	185 A	215 A

Technical Data **Ex9C**, frame size 185

Contactors Ex9C115, Ex9C150, Ex9C185

Electrical parameters - main contacts and general			
	Ex9C115	**Ex9C150**	**Ex9C185**
Making capacity			
AC-3 / AC-4 at 230 V	1150 A / 648 A	1500 A / 816 A	1850 A / 972 A
AC-3 / AC-4 at 400 V	1150 A / 648 A	1500 A / 816 A	1850 A / 972 A
AC-3 / AC-4 at 690 V	1150 A / 576 A	1500 A / 684 A	1700 A / 780 A
Breaking capacity			
AC-3 / AC-4 at 230 V	920 A / 540 A	1200 A / 680 A	1480 A / 810 A
AC-3 / AC-4 at 400 V	920 A / 540 A	1200 A / 680 A	1480 A / 810 A
AC-3 / AC-4 at 690 V	920 A / 480 A	1200 A / 570 A	1360 A / 650 A
Mechanical service life	8 000 000 operation cycles		
Electrical service life 380/400 V			
AC-3	1 000 000 operation cycles		
AC-4	200 000 operation cycles		
Switching frequency			
AC-3	1 000 oper. cycles per hour	750 oper. cycles per hour	750 oper. cycles per hour
AC-4	130 oper. cycles per hour	130 oper. cycles per hour	130 oper. cycles per hour
Overvoltage category	III		
Comparative Tracking Index	400 V		
Prospective short circuit current I_q	50 kA		

Electrical parameters - control coil			
	Ex9C115	**Ex9C150**	**Ex9C185**
Control Voltage U_c	24, 36, 42, 48, 110, 127, 220, 230, 240, 380, 400, 415 V AC/DC		
Tolerance of Control Voltage U_c	0.85 — 1.1 U_c		
Frequency	50 Hz / DC		
Power consumption AC / DC			
Pick-up	400 VA / 400 W		
Hold	10 VA / 10 W		
Duty	100 %		
Closing delay	30 — 65 ms		
Opening delay	45 — 65 ms		

Electrical parameters - built-in auxiliary contacts	
Built-in auxiliary contacts	2 NO + 2 NC
Rated operating voltage U_e	690 V AC
Rated insulating voltage U_i	690 V AC
Rated impulse withstand voltage U_{imp}	6 kV
Rated frequency	50 Hz
Interlocked opposing contacts according to EN 60947-4-1, Annex L	yes
Conventional free air thermal current I_{th}	10 A
Rated operational current I_e	
AC-15	6 A at 24 V, 3.13 A at 230 V, 1.8 A at 400 V, 1.04 A at 690 V
DC-13	0.55 A at 125 V, 0.27 A at 250 V
Max. back-up fuse	10 A gG/gL
Conditional short circuit current I_k with max. back-up fuse	1 kA

Technical Data **Ex9C**, frame size 185

Contactors Ex9C115, Ex9C150, Ex9C185

Mechanical parameters			
	Ex9C115	**Ex9C150**	**Ex9C185**
Device width	120 mm		
Device height	173 mm		
Device depth	174 mm		
Mounting	with screws onto panel		
Degree of protection	IP20		
Terminals	connection plates for M8 screw		
Terminal capacity	copper bar 2x20x5 or 2x cable lug 25 — 120 mm^2		
Fastening torque of the screw	18 Nm		
Control coil terminal capacity	1 — 2.5 mm^2		
Control coil terminal fastening torque	1.7 Nm		
Ambient temperature	-20 — +60 °C		
Altitude	≤ 2000 m		
Relative humidity	≤ 90 %		
Resistance to humidity and heat	class 2		
Pollution degree	3		
Installation class	III		
Weight	3 kg		

Dimensions

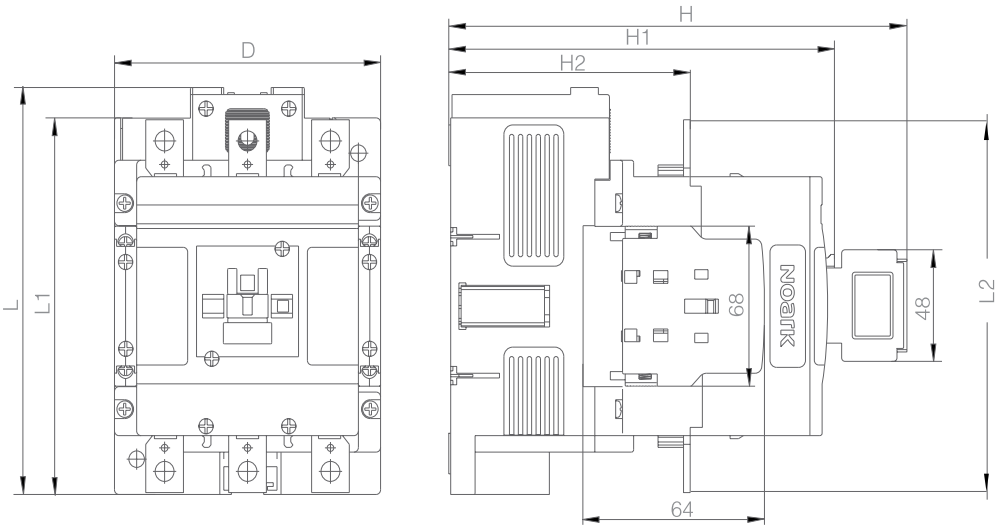

	Ex9C115	**Ex9C150**	**Ex9C185**
D	120 mm		
L	173 mm		
L1	160 mm		
L2	159 mm		
H	205 mm		
H1	176 mm		
H2	108 mm		

Contactors Ex9C115, Ex9C150, Ex9C185

Mounting positions

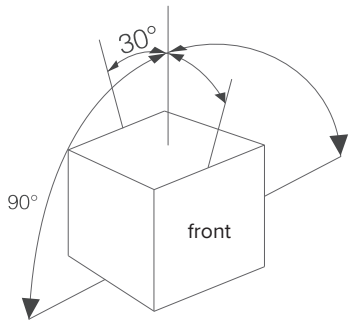

Wiring diagram

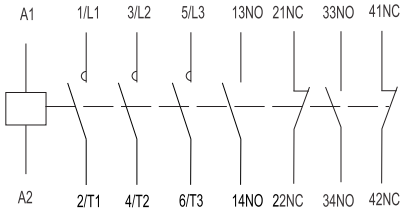

Technical Data **Ex9C**, frame size 300

Contactors Ex9C225, Ex9C265, Ex9C300

General parameters		
Contactors rated at AC-3		
Suitable for industrial applications		
3-pole versions		
Mounting with screws onto panel		
With built-in 2NO + 2NC auxiliary contacts		
Accessories		
Front-mounted auxiliary contacts	AX42	101284 — 101291
Side-mounted auxiliary contacts	AX44	106322, 107958, 107957
Overload thermal relay	Ex9R500	106329 — 106332
Pneumatic time delay block	TDD4	104489 — 104494
Mechanical interlocks	MIT45	107963

Electrical parameters - main contacts and general			
	Ex9C225	**Ex9C265**	**Ex9C300**
Tested according to	IEC/EN 60947-4-1		
Rated operating voltage U_e	230 / 400 / 690 / 1000 V AC		
Rated insulating voltage U_i	1000 V AC		
Rated impulse withstand voltage U_{imp}	8 kV		
Rated frequency for AC	50/60 Hz		
Interlocked opposing contacts according to EN 60947-4-1, Annex L	yes	yes	yes
Conventional free air thermal current I_{th}	275 A	330 A	400 A
Rated operational current I_e			
AC-1	275 A	330 A	400 A
AC-3 / AC-4 at 400 V	225 A / 96 A	265 A / 117 A	300 A / 125 A
AC-3 / AC-4 at 690 V	225 A / 85 A	265 A / 105 A	280 A / 115 A
AC-3 / AC-4 at 1000 V	68 A / 42 A	95 A / 57 A	95 A / 57 A
Rated power of 3-phase motor			
AC-3 / AC-4 at 230 V	55 kW / 30 kW	75 kW / 37 kW	90 kW / 40 kW
AC-3 / AC-4 at 400 V	110 kW / 55 kW	132 kW / 63 kW	160 kW / 75 kW
AC-3 / AC-4 at 690 V	200 kW / 80 kW	250 kW / 100 kW	250 kW / 110 kW
Maximum short circuit protection fuse			
Coordination type 1 at 500 V AC	500 A gG/gL	500 A gG/gL	500 A gG/gL
Coordination type 2 at 500 V AC	400 A gG/gL	400 A gG/gL	400 A gG/gL
Safe isolation (EN 61140)			
Main contact — main contact	600 V AC	600 V AC	600 V AC
Main contact — coil	600 V AC	600 V AC	600 V AC
3-phase power AC-1			
Maximum back-up fuse gG/gL	500 A	800 A	800 A
Rated current $I_e = I_{th}$	275 A	330 A	400 A

Technical Data **Ex9C**, frame size 300

Contactors Ex9C225, Ex9C265, Ex9C300

Electrical parameters - main contacts and general			
	Ex9C225	**Ex9C265**	**Ex9C300**
Making capacity			
AC-3 / AC-4 at 230 V	2250 A / 1152 A	2650 A / 1404 A	3000 A / 1500 A
AC-3 / AC-4 at 400 V	2250 A / 1152 A	2650 A / 1404 A	3000 A / 1500 A
AC-3 / AC-4 at 690 V	2250 A / 1020 A	2650 A / 1260 A	2800 A / 1380 A
Breaking capacity			
AC-3 / AC-4 at 230 V	1800 A / 960 A	2120 A / 1170 A	2400 A / 1250 A
AC-3 / AC-4 at 400 V	1800 A / 960 A	2120 A / 1170 A	2400 A / 1250 A
AC-3 / AC-4 at 690 V	1800 A / 850 A	2120 A / 1050 A	2240 A / 1150 A
Mechanical service life	8 000 000 operation cycles		
Electrical service life 380/400 V			
AC-3	1 000 000 operation cycles		
AC-4	200 000 operation cycles		
Switching frequency			
AC-3	500 oper. cycles per hour	500 oper. cycles per hour	500 oper. cycles per hour
AC-4	130 oper. cycles per hour	130 oper. cycles per hour	130 oper. cycles per hour
Overvoltage category	III		
Comparative Tracking Index	400 V		
Prospective short circuit current I_q	50 kA		

Electrical parameters - control coil			
	Ex9C225	**Ex9C265**	**Ex9C300**
Control Voltage U_c	24, 36, 42, 48, 110, 127, 220, 230, 240, 380, 400, 415 V AC/DC		
Tolerance of Control Voltage U_c	0.85 — 1.1 U_c		
Frequency	50 Hz / DC		
Power consumption AC / DC			
Pick-up	590 VA / 590 W		
Hold	10 VA / 10 W		
Duty	100 %		
Closing delay	45 — 80 ms		
Opening delay	50 — 70 ms		

Electrical parameters - built-in auxiliary contacts	
Built-in auxiliary contacts	2 NO + 2 NC
Rated operating voltage U_e	690 V AC
Rated insulating voltage U_i	690 V AC
Rated impulse withstand voltage U_{imp}	6 kV
Rated frequency	50 Hz
Interlocked opposing contacts according to EN 60947-4-1, Annex L	yes
Conventional free air thermal current I_{th}	10 A
Rated operational current I_e	
AC-15	6 A at 24 V, 3.13 A at 230 V, 1.8 A at 400 V, 1.04 A at 690 V
DC-13	0.55 A at 125 V, 0.27 A at 250 V
Max. back-up fuse	10 A gG/gL
Conditional short circuit current I_k with max. back-up fuse	1 kA

Technical Data **Ex9C**, frame size 300

Contactors Ex9C225, Ex9C265, Ex9C300

Mechanical parameters			
	Ex9C225	**Ex9C265**	**Ex9C300**
Device width	145 mm		
Device height	212 mm		
Device depth	207 mm		
Mounting	with screws onto panel		
Degree of protection	IP20		
Terminals	connection plates for M10 screw		
Terminal capacity	copper bar 2x30x5 or 2x cable lug 50 — 240 mm²		
Fastening torque of the screw	35 Nm		
Control coil terminal capacity	1 — 2.5 mm²		
Control coil terminal fastening torque	1.7 Nm		
Ambient temperature	-20 — +60 °C		
Altitude	≤ 2000 m		
Relative humidity	≤ 90 %		
Resistance to humidity and heat	class 2		
Pollution degree	3		
Installation class	III		
Weight	6 kg		

Dimensions

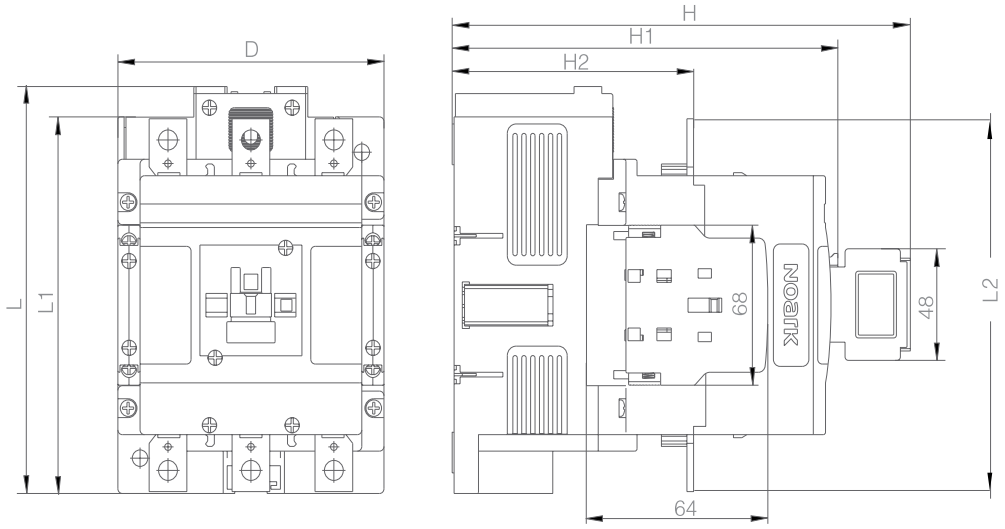

	Ex9C225	**Ex9C265**	**Ex9C300**
D	145 mm		
L	212 mm		
L1	200 mm		
L2	193 mm		
H	239 mm		
H1	210 mm		
H2	134 mm		

Contactors Ex9C225, Ex9C265, Ex9C300

Mounting positions

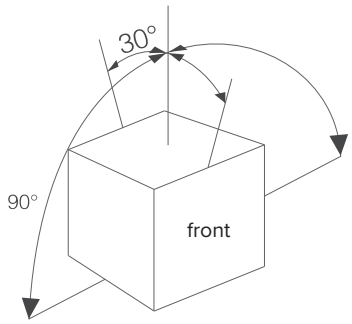

Wiring diagram

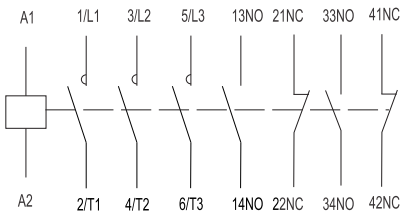

Contactors Ex9C400, Ex9C500

General parameters		
Contactors rated at AC-3		
Suitable for industrial applications		
3-pole versions		
Mounting with screws onto panel		
With built-in 2NO + 2NC auxiliary contacts		
Accessories		
Front-mounted auxiliary contacts	AX42	101284 — 101291
Side-mounted auxiliary contacts	AX44	106322, 107958, 107957
Overload thermal relay	Ex9R500	106329 — 106332
Pneumatic time delay block	TDD4	104489 — 104494
Mechanical interlocks	MIT46	107964

Electrical parameters - main contacts and general		
	Ex9C400	**Ex9C500**
Tested according to	IEC/EN 60947-4-1	
Rated operating voltage U_e	230 / 400 / 690 / 1000 V AC	
Rated insulating voltage U_i	1000 V AC	
Rated impulse withstand voltage U_{imp}	8 kV	
Rated frequency for AC	50/60 Hz	
Interlocked opposing contacts according to EN 60947-4-1, Annex L	yes	yes
Conventional free air thermal current I_{th}	430 A	610 A
Rated operational current I_e		
AC-1	430 A	610 A
AC-3 / AC-4 at 400 V	400 A / 150 A	500 A / 175 A
AC-3 / AC-4 at 690 V	400 A / 135 A	450 A / 150 A
AC-3 / AC-4 at 1000 V	180 A / 80 A	200 A / 80 A
Rated power of 3-phase motor		
AC-3 / AC-4 at 230 V	132 kW / 45 kW	160 kW / 55 kW
AC-3 / AC-4 at 400 V	220 kW / 90 kW	250 kW / 100 kW
AC-3 / AC-4 at 690 V	355 kW / 132 kW	400 kW / 150 kW
Maximum short circuit protection fuse		
Coordination type 1 at 500 V AC	630 A gG/gL	630 A gG/gL
Coordination type 2 at 500 V AC	630 A gG/gL	630 A gG/gL
Safe isolation (EN 61140)		
Main contact — main contact	600 V AC	600 V AC
Main contact — coil	600 V AC	600 V AC
3-phase power AC-1		
Maximum back-up fuse gG/gL	1000 A	1200 A
Rated current $I_e = I_{th}$	430 A	610 A

Technical Data **Ex9C**, frame size 500

Contactors Ex9C400, Ex9C500

Electrical parameters - main contacts and general		
	Ex9C400	**Ex9C500**
Making capacity		
AC-3 / AC-4 at 230 V	4000 A / 1800 A	5000 A / 2100 A
AC-3 / AC-4 at 400 V	4000 A / 1800 A	5000 A / 2100 A
AC-3 / AC-4 at 690 V	4000 A / 1620 A	4500 A / 1800 A
Breaking capacity		
AC-3 / AC-4 at 230 V	3200 A / 1500 A	4000 A / 1750 A
AC-3 / AC-4 at 400 V	3200 A / 1500 A	4000 A / 1750 A
AC-3 / AC-4 at 690 V	3200 A / 1350 A	3600 A / 1500 A
Mechanical service life	5 000 000 operation cycles	
Electrical service life 380/400 V		
AC-3	1 000 000 operation cycles	
AC-4	200 000 operation cycles	
Switching frequency		
AC-3	500 oper. cycles per hour	420 oper. cycles per hour
AC-4	130 oper. cycles per hour	130 oper. cycles per hour
Overvoltage category	III	
Comparative Tracking Index	400 V	
Prospective short circuit current I_q	50 kA	

Electrical parameters - control coil		
	Ex9C400	**Ex9C500**
Control Voltage U_c	36, 42, 48, 110, 127, 220, 230, 240, 380, 400, 415 V AC/DC	
Tolerance of Control Voltage U_c	0.85 — 1.1 U_c	
Frequency	50 Hz / DC	
Power consumption AC / DC		
Pick-up	600 VA / 600 W	
Hold	10 VA / 10 W	
Duty	100 %	
Closing delay	70 — 90 ms	
Opening delay	60 — 80 ms	

Electrical parameters - built-in auxiliary contacts	
Built-in auxiliary contacts	2 NO + 2 NC
Rated operating voltage U_e	690 V AC
Rated insulating voltage U_i	690 V AC
Rated impulse withstand voltage U_{imp}	6 kV
Rated frequency	50 Hz
Interlocked opposing contacts according to EN 60947-4-1, Annex L	yes
Conventional free air thermal current I_{th}	10 A
Rated operational current I_e	
AC-15	6 A at 24 V, 3.13 A at 230 V, 1.8 A at 400 V, 1.04 A at 690 V
DC-13	0.55 A at 125 V, 0.27 A at 250 V
Max. back-up fuse	10 A gG/gL
Conditional short circuit current I_k with max. back-up fuse	1 kA

Technical Data **Ex9C**, frame size 500

Contactors Ex9C400, Ex9C500

Mechanical parameters		
	Ex9C400	**Ex9C500**
Device width	160 mm	
Device height	218 mm	
Device depth	229 mm	
Mounting	with screws onto panel	
Degree of protection	IP20	
Terminals	connection plates for M10 screw	
Terminal capacity	copper bar 2x30x5 or 2x cable lug 50 — 240 mm²	
Fastening torque of the screw	35 Nm	
Control coil terminal capacity	1 — 2.5 mm²	
Control coil terminal fastening torque	1.7 Nm	
Ambient temperature	-20 — +60 °C	
Altitude	≤ 2000 m	
Relative humidity	≤ 90 %	
Resistance to humidity and heat	class 2	
Pollution degree	3	
Installation class	III	
Weight	9,5 kg	

Dimensions

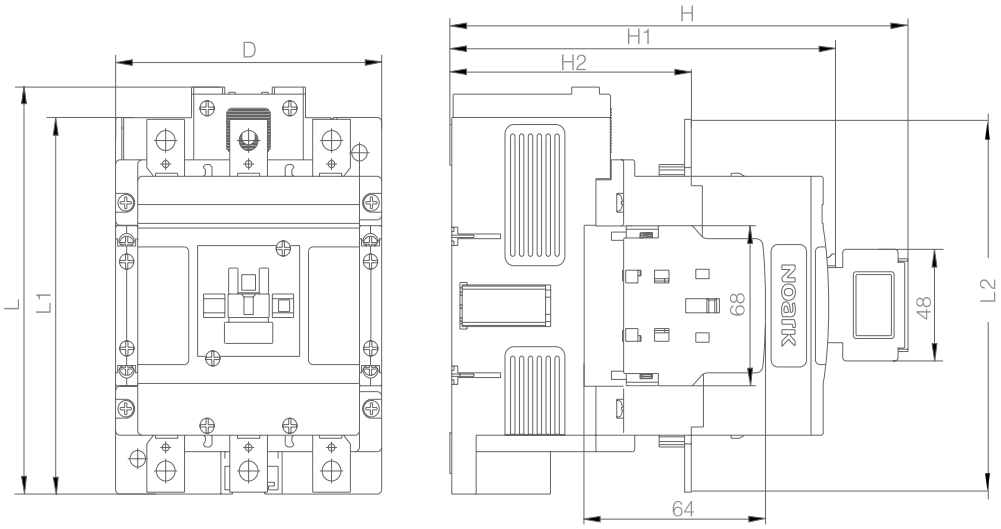

	Ex9C400	**Ex9C500**
D	160 mm	
L	218 mm	
L1	200 mm	
L2	211 mm	
H	261 mm	
H1	229 mm	
H2	151 mm	

Contactors Ex9C400, Ex9C500

Mounting positions

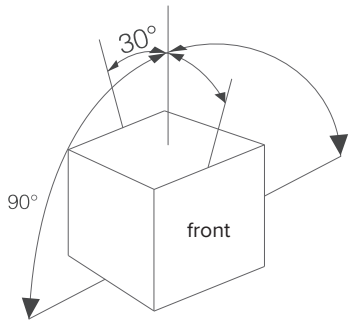

Wiring diagram

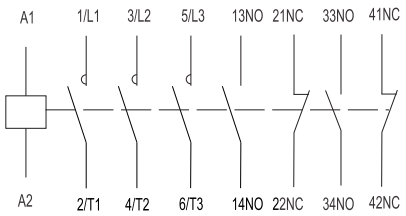

Technical Data **Ex9C**, frame size 1000

Contactors Ex9C630, Ex9C800, Ex9C1000

General parameters		
Contactors rated at AC-3		
Suitable for industrial applications		
3-pole versions		
Mounting with screws onto panel		
With built-in 2NO + 2NC auxiliary contacts		
Accessories		
Front-mounted auxiliary contacts	AX42	101284 — 101291
Side-mounted auxiliary contacts	AX44	106322, 107958, 107957
Pneumatic time delay block	TDD4	104489 — 104494

Electrical parameters - main contacts and general			
	Ex9C630	**Ex9C800**	**Ex9C1000**
Tested according to	IEC/EN 60947-4-1		
Rated operating voltage U_e	230 / 400 / 690 / 1000 V AC		
Rated insulating voltage U_i	1250 V AC		
Rated impulse withstand voltage U_{imp}	8 kV		
Rated frequency for AC	50/60 Hz		
Interlocked opposing contacts according to EN 60947-4-1, Annex L	—		
Conventional free air thermal current I_{th}	800 A	1000 A	1000 A
Rated operational current I_e			
AC-1 at 230 V	800 A	1000 A	1000 A
AC-3 / AC-4 at 400 V	630 A / 225 A	800 A / 242 A	1000 A / 260 A
AC-3 / AC-4 at 690 V	560 A / 200 A	650 A / 215 A	800 A / 230 A
AC-3 / AC-4 at 1000 V	300 A / 110 A	320 A / 150 A	350 A / 150 A
Rated power of 3-phase motor			
AC-3 / AC-4 at 230 V	200 kW / 75 kW	250 kW / 75 kW	315 kW / 80 kW
AC-3 / AC-4 at 400 V	335 kW / 110 kW	450 kW / 132 kW	560 kW / 150 kW
AC-3 / AC-4 at 690 V	560 kW / 185 kW	630 kW / 200 kW	750 kW / 220 kW
AC-3 / AC-4 at 1000 V	400 kW / 150 kW	450 kW / 200 kW	500 kW / 200 kW
Safe isolation (EN 61140)			
Main contact — main contact	600 V AC	600 V AC	600 V AC
Main contact — coil	600 V AC	600 V AC	600 V AC
3-phase power AC-1			

Technical Data **Ex9C**, frame size 1000

Contactors Ex9C630, Ex9C800, Ex9C1000

Electrical parameters - main contacts and general			
	Ex9C630	**Ex9C800**	**Ex9C1000**
Making capacity	10×I(AC-3) or 12×I(AC-4)		
AC-3 / AC-4 at 400 V	6300 A / 2700 A	8000 A / 2094 A	10000 A / 3120
AC-3 / AC-4 at 690 V	5600 A / 2400 A	6500 A / 2580 A	8000 A / 2760 A
AC-3 / AC-4 at 1000 V	3000 A / 1320 A	3200 A / 1800 A	3500 A / 1800 A
Breaking capacity	8×I(AC-3) or 10×I(AC-4)		
AC-3 / AC-4 at 400 V	5040 A / 2250 A	6400 A / 2420 A	8000 A / 2600 A
AC-3 / AC-4 at 690 V	4480 A / 2000 A	5200 A / 2150 A	6400 A / 2300 A
AC-3 / AC-4 at 1000 V	2400 A/ 1100 A	2560 A / 1500 A	2800 A / 1500 A
Mechanical service life	150 000 operation cycles		
Electrical service life 380/400 V			
AC-3	65000	65000	50000
Switching frequency			
AC-3	300 oper. cycles per hour	300 oper. cycles per hour	120 oper. cycles per hour
AC-1	600 oper. cycles per hour	600 oper. cycles per hour	300 oper. cycles per hour
Overvoltage category	III		
Comparative Tracking Index	400 V		
Prospective short circuit current I_q	50 kA		

Electrical parameters - control coil			
	Ex9C630	**Ex9C800**	**Ex9C1000**
Control Voltage U_c	48, 110, 127, 220, 230, 240, 380, 400, 415 V AC/DC		
Tolerance of Control Voltage U_c	0.85 — 1.1 U_c		
Frequency	AC / DC		
Power consumption AC / DC			
Pick-up	850 VA / 850 W		
Hold	10 VA / 10 W		
Duty	100 %		
Closing delay	80 — 120 ms		
Opening delay	85 — 160 ms		

Electrical parameters - built-in auxiliary contacts	
Built-in auxiliary contacts	2 NO + 2 NC
Rated operating voltage U_e	690 V AC
Rated insulating voltage U_i	690 V AC
Rated impulse withstand voltage U_{imp}	6 kV
Rated frequency	50 Hz
Interlocked opposing contacts according to EN 60947-4-1, Annex L	—
Conventional free air thermal current I_{th}	10 A
Rated operational current I_e	
AC-15	6 A at 24 V, 3.13 A at 230 V, 1.8 A at 400 V, 1.04 A at 690 V
DC-13	0.55 A at 125 V, 0.27 A at 250 V
Max. back-up fuse	10 A gG/gL
Conditional short circuit current I_k with max. back-up fuse	1 kA

Technical Data **Ex9C**, frame size 1000

Contactors Ex9C630, Ex9C800, Ex9C1000

Mechanical parameters			
	Ex9C630	**Ex9C800**	**Ex9C1000**
Device width	230	230	
Device height	272	272	
Device depth	265	265	
Mounting	with screws onto panel		
Degree of protection	IP20		
Terminals	M10	M12	
Terminal capacity	50mm	60mm	
Fastening torque of the screw	14-24 Nm	35-45 Nm	
Control coil terminal capacity	1 — 4 mm^2		
Control coil terminal fastening torque	1.7 Nm		
Ambient temperature	-20 — +60 °C		
Altitude	≤2000 m		
Relative humidity	≤ 90 %		
Resistance to humidity and heat	class 2		
Pollution degree	3		
Installation class	III		
Weight	20.2 kg	22 kg	22.3 kg

Dimensions

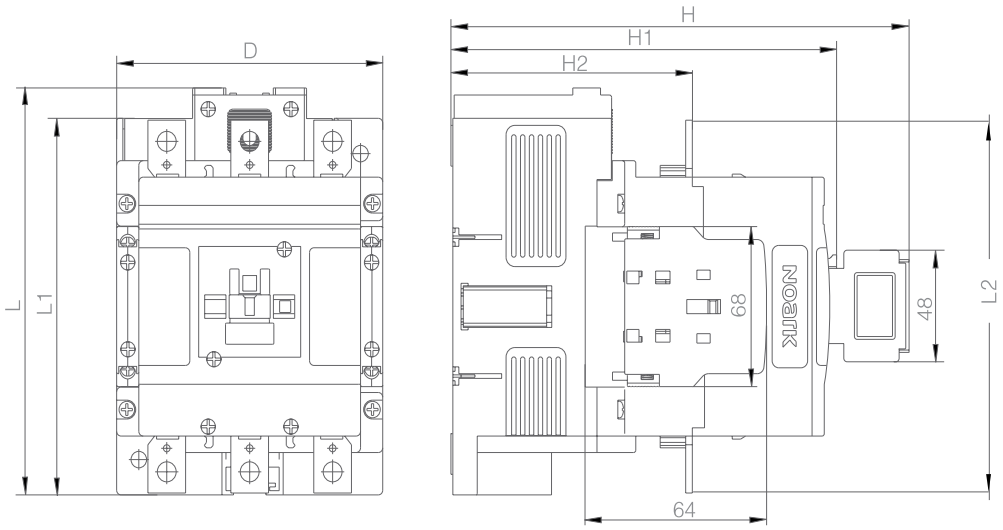

	Ex9C630	**Ex9C800**	**Ex9C1000**
D	230	230	
L	272	272	
L1	250	250	
L2	298	322	
H	295	295	
H1	265	265	
H2	167	169	

Contactors Ex9C630, Ex9C800, Ex9C1000

Mounting positions

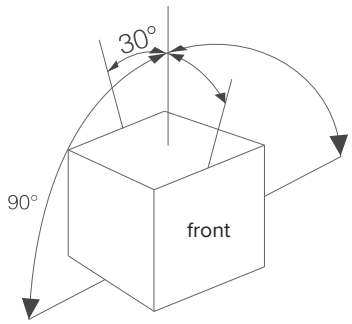

Wiring diagram

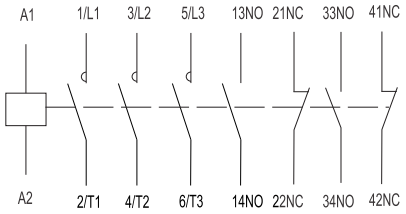

Technical Data **Ex9C**, frame size 1260

Contactors Ex9C1260

General parameters		
Contactors rated at AC-3		
Suitable for industrial applications		
3-pole versions		
Mounting with screws onto panel		
With built-in 2NO + 2NC auxiliary contacts		
Accessories		
Front-mounted auxiliary contacts	AX42	101284 — 101291
Side-mounted auxiliary contacts	AX44	106322, 107958, 107957
Pneumatic time delay block	TDD4	104489 — 104494

Electrical parameters - main contacts and general	
	Ex9C1260
Tested according to	IEC/EN 60947-4-1
Rated operating voltage U_e	1140 V
Rated insulating voltage U_i	1250 V
Rated impulse withstand voltage U_{imp}	8 kV
Rated frequency for AC	50/60 Hz
Interlocked opposing contacts according to EN 60947-4-1, Annex L	—
Conventional free air thermal current I_{th}	1260 A
Rated operational current I_e	
AC-1 at 230 V	1260 A
Maximum short circuit protection fuse	
Coordination type 1 at 500 V AC	1500 A gG/gL
Coordination type 2 at 500 V AC	1500 A gG/gL
Safe isolation (EN 61140)	
Main contact — main contact	600 V AC
Main contact — coil	600 V AC

Electrical parameters - main contacts and general	
	Ex9C1260
Making capacity	1.5×I(AC-1)
Breaking capacity	1.5×I(AC-1)
Mechanical service life	100 000 operation cycles
Electrical service life 380/400 V	
AC-1	60 000 operation cycles
Overvoltage category	III
Comparative Tracking Index	400 V
Prospective short circuit current I_q	50 kA

Contactors Ex9C1260

Electrical parameters - control coil	
	Ex9C1260
Control Voltage U_c	48, 110, 127, 220, 230, 240, 380, 400, 415 V AC/DC
Tolerance of Control Voltage U_c	0.85 — 1.1 U_c
Frequency	AC / DC
Power consumption AC / DC	
Pick-up	850 VA / 850 W
Hold	18 VA / 18 W
Duty	100 %
Closing delay	95 — 125 ms
Opening delay	200 — 240 ms

Electrical parameters - built-in auxiliary contacts	
Built-in auxiliary contacts	2 NO + 2 NC
Rated operating voltage U_e	690 V AC
Rated insulating voltage U_i	690 V AC
Rated impulse withstand voltage U_{imp}	6 kV
Rated frequency	50 Hz
Interlocked opposing contacts according to EN 60947-4-1, Annex L	—
Conventional free air thermal current I_{th}	10 A
Rated operational current I_e	
AC-15	6 A at 24 V, 3.13 A at 230 V, 1.8 A at 400 V, 1.04 A at 690 V
DC-13	0.55 A at 125 V, 0.27 A at 250 V
Max. back-up fuse	10 A gG/gL
Conditional short circuit current I_k with max. back-up fuse	1 kA

Technical Data **Ex9C**, frame size 1260

Contactors Ex9C1260

Mechanical parameters	
	Ex9C1260
Device width	230 mm
Device height	322 mm
Device depth	263 mm
Mounting	with screws onto panel
Degree of protection	IP20
Terminals	M12
Terminal capacity	60mm
Fastening torque of the screw	35-45 Nm
Control coil terminal capacity	1 — 4 mm^2
Control coil terminal fastening torque	1.7 Nm
Ambient temperature	-20 — +60 °C
Altitude	≤2000 m
Relative humidity	≤ 90 %
Resistance to humidity and heat	class 2
Pollution degree	3
Installation class	III
Weight	22

Dimensions

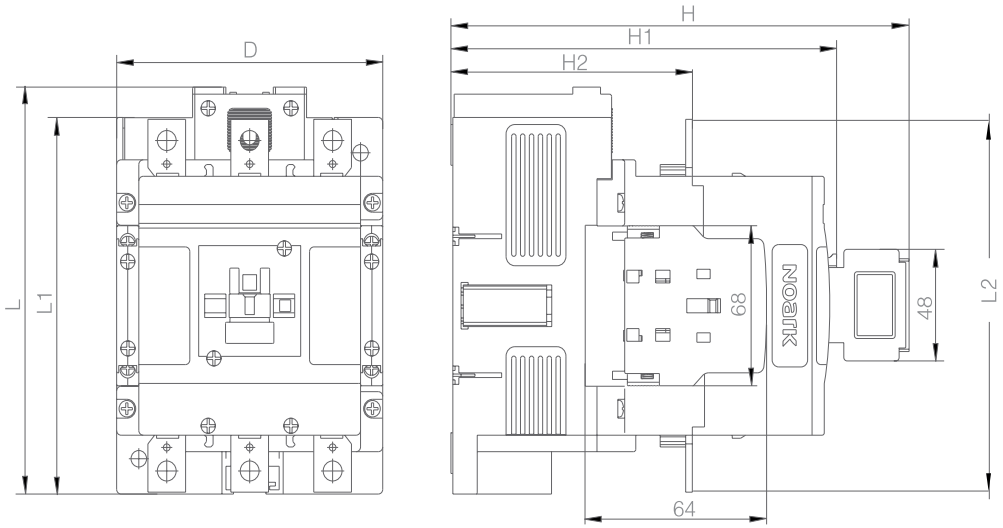

	Ex9C1260
D	230
L	272
L1	250
L2	322
H	295
H1	265
H2	169

Contactors Ex9C1260

Mounting positions

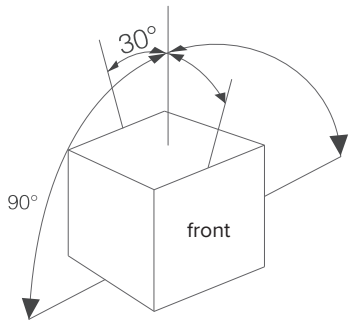

Wiring diagram

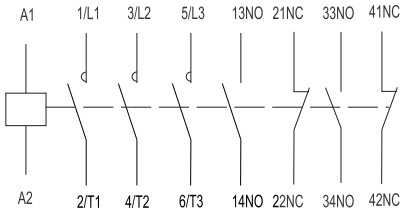

Technical Data **Ex9C**, frame size 1450

Contactors Ex9C1450

General parameters		
Contactors rated at AC-3		
Suitable for industrial applications		
3-pole versions		
Mounting with screws onto panel		
Accessories		
Front-mounted auxiliary contacts	AX42(AX-12/14)	101284 - 101291
Pneumatic time delay block	TDD4	104489 - 104494

Electrical parameters - main contacts and general	
	Ex9C1450
Tested according to	IEC/EN 60947-4-1
Rated operating voltage U_e	1140 V
Rated insulating voltage U_i	1250 V
Rated impulse withstand voltage U_{imp}	12 kV
Rated frequency for AC	50/60 Hz
Interlocked opposing contacts according to EN 60947-4-1, Annex L	—
Conventional free air thermal current I_{th}	1450 A
Rated operational current I_e	
AC-1 at 230 V	1450 A
Maximum short circuit protection fuse	
Coordination type 1 at 500 V AC	2000 A gG/gL
Coordination type 2 at 500 V AC	2000 A gG/gL
Safe isolation (EN 61140)	
Main contact — main contact	600 V AC
Main contact — coil	600 V AC

Electrical parameters - main contacts and general	
	Ex9C1450
Making capacity	1.5×I(AC-1)
Breaking capacity	1.5×I(AC-1)
Mechanical service life	100 000 operation cycles
Electrical service life 380/400 V	
AC-1	80 000 operation cycles
Overvoltage category	III
Comparative Tracking Index	400 V
Prospective short circuit current I_q	50 kA

Technical Data **Ex9C**, frame size 1450

Contactors Ex9C1450

Electrical parameters - control coil	
	Ex9C1450
Control Voltage U_c	230, 380 V AC
Tolerance of Control Voltage U_c	0.85 — 1.1 U_c
Frequency AC	50/60 HZ
Power consumption AC	
Pick-up	2700 VA
Hold	50 VA
Duty	100 %
Closing delay	50 — 90 ms
Opening delay	100 — 170 ms

Mechanical parameters	
	Ex9C1450
Device width	449
Device height	230
Device depth	235
Mounting	with screws onto panel
Degree of protection	IP20
Terminals	M12
Terminal capacity	100mm×5mm×2
Fastening torque of the screw	35-45 Nm
Control coil terminal capacity	1 — 2.5 mm^2
Control coil terminal fastening torque	0.8 Nm
Ambient temperature	-20 — +60 °C
Altitude	≤2000 m
Relative humidity	≤ 90 %
Resistance to humidity and heat	class 2
Pollution degree	3
Installation class	III
Weight	27

Contactors Ex9C1450

Dimensions

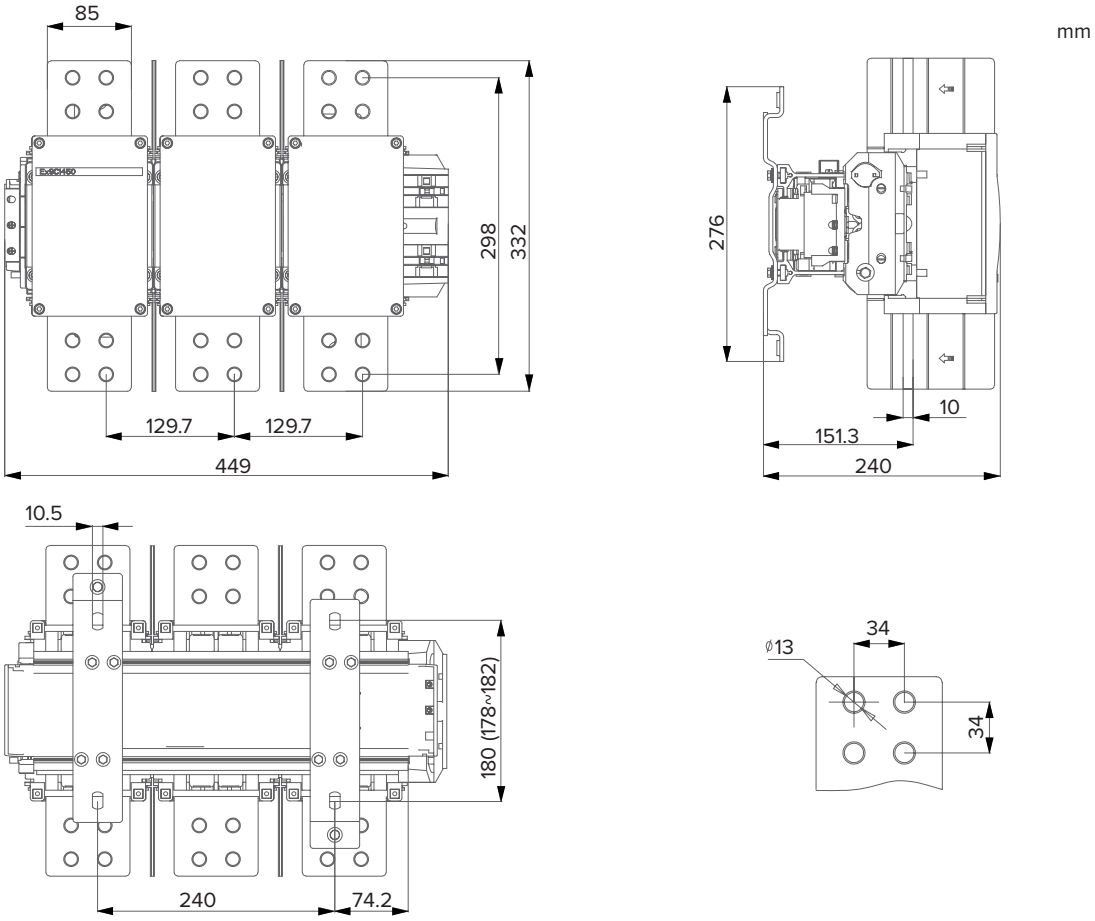

Mounting positions

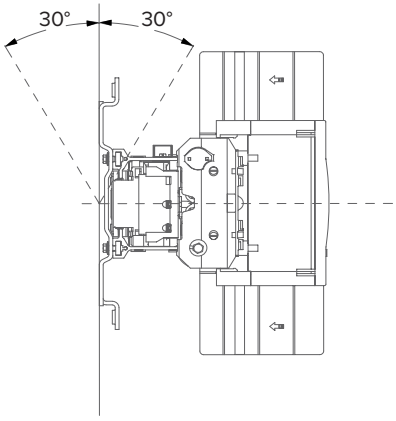
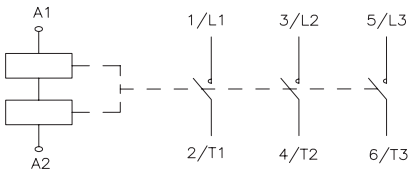
Wiring diagram